HUNTER - AERODYNE - CEILING FAN INSTALLATION GUIDE

Installation Manual

HUNTER - AERODYNE - CEILING FAN INSTALLATION GUIDE

Congratulations on purchasing your new Hunter® ceiling fan!

The ceiling fan you purchased will provide comfort and performance in your home or office for many years. This instruction manual contains complete instructions for installing and operating your fan. We are proud of our work and appreciate the opportunity to supply you with the best ceiling fan available anywhere in the world.

We are here to help!

This Instruction Manual is designed to make installation as simple as possible. While working through this Instruction Manual, keep your smartphone or tablet nearby. We have added video links to help you through the more technical sections. If you are unfamiliar or uncomfortable with wiring, contact a qualified electrician. We also provide telephone support at 1.888.830.1326 or visit us at HunterFan.com.

READ and SAVE These Instructions

⚠ WARNING

Warning

w.1 - To reduce the risk of fire, electrical shock, or personal injury, mount fan directly from building structure and/or an outlet box marked acceptable for fan support of 70 lbs (31.8 kg) and use the mounting screws provided with the outlet box.

w.2 - To avoid possible electrical shock, before installing or servicing your fan, disconnect the power by turning off the circuit breakers to the outlet box and associated wall switch location. If you cannot lock the circuit breakers in the off position, securely fasten a prominent warning device, such as a tag, to the service panel.

w.3 – To reduce the risk of electric shock, this fan must be installed with an isolating wall control/switch.

w.4 - To reduce the risk of personal injury, do not bend the blade brackets when installing the blade brackets, balancing the blades, or cleaning the fan. Do not insert foreign objects in between rotating fan blades.

w.5 - Chemical burn hazard. Keep batteries away from children. This remote contains a lithium button cell battery. If a new or used lithium button/coin cell battery is swallowed or enters the body, it can cause severe internal burns and can lead to death in as little as 2 hours. Always completely secure the battery compartment. If the battery compartment does not close securely, stop using the product, remove the batteries, and keep it away from children. If you think batteries might have been swallowed or placed inside any part of the body, seek immediate medical attention. Dispose of cells properly and keep away from children. Even used cells may cause injury.

w.6 - Non-rechargeable batteries are not to be recharged. Exhausted batteries are to be removed from the product.

Caution

c.1 - All wiring must be in accordance with national and local electrical codes ANSI/NFPA 70. If you are unfamiliar with wiring, use a qualified electrician.

c.2 - Use only Hunter replacement parts.

This equipment has been tested and found to comply with the limits for a Class B digital device, pursuant to part 15 of the FCC Rules. These limits are designed to provide reasonable protection against harmful interference in a residential installation. This equipment generates, uses and can radiate radio frequency energy and if not installed and used in accordance with the instructions may cause harmful interference to radio communications.

However, there is no guarantee that interference will not occur in a particular installation. If this equipment does cause harmful interference to radio or television reception, which can be determined by turning the equipment off and on, the user is encouraged to try to correct the interference by one or more of the following measures:

- Reorient or relocate the receiving antenna.
- Increase the separation between the equipment and receiver.
- Connect the equipment into an outlet on a circuit different from that to which the receiver is connected.
- Consult the dealer or an experienced radio/TV technician for help.

Caution: modifications not approved by the party responsible for compliance could void user's authority to operate the equipment.

This device complies with Part 15 of the FCC Rules. Operation is subject to the following two conditions: (1) This device may not cause harmful interference, and (2) this device must accept any interference received, including interference that may cause undesired operation.

This product conforms to UL Standard 507.

Intertek

Here are the tools you'll need to complete your installation:

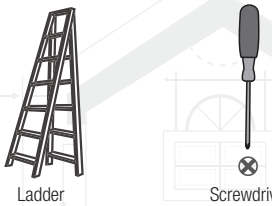
Ladder

Screwdriver

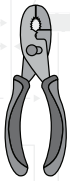
Pliers

Wire Strippers

OPTIONAL
If mounting to a support structure, you will also need these tools.

Drill

9/64" Drill Bit

© 2020 Hunter Fan Company
7130 Goodlett Farms Pkwy, Suite 400
Memphis TN 38016

#2 Chootoo Road, South Aranguez, San Juan, Trinidad

HUNTER - AERODYNE - CEILING FAN INSTALLATION GUIDE

Here is what comes in your box:

We recommend that you pull everything out of the box and lay it out. We have grouped the drawn components below with the hardware you'll need for those parts. The screws below are drawn to scale to make it easier to identify what piece of hardware is needed to install each component.

Hunter Pro Tip:

Do not discard the hardware bags or mix parts from different bags. Make note of the symbol printed on each hardware bag. The symbols can be used to identify the appropriate hardware for each step.

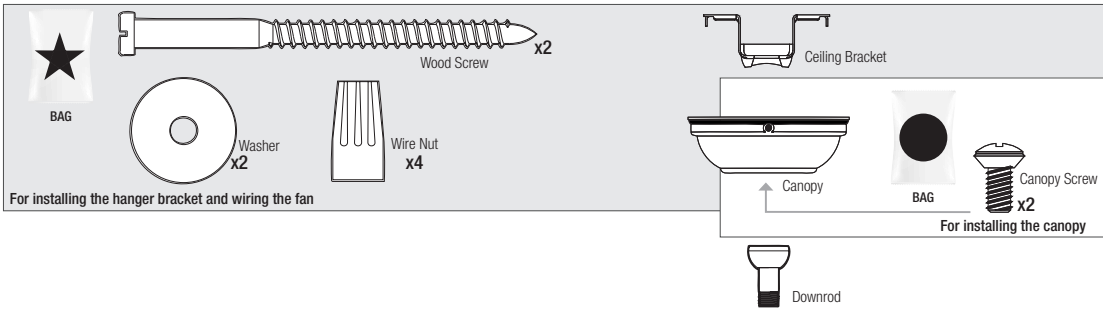

For installing the hanger bracket and wiring the fan

For installing the canopy

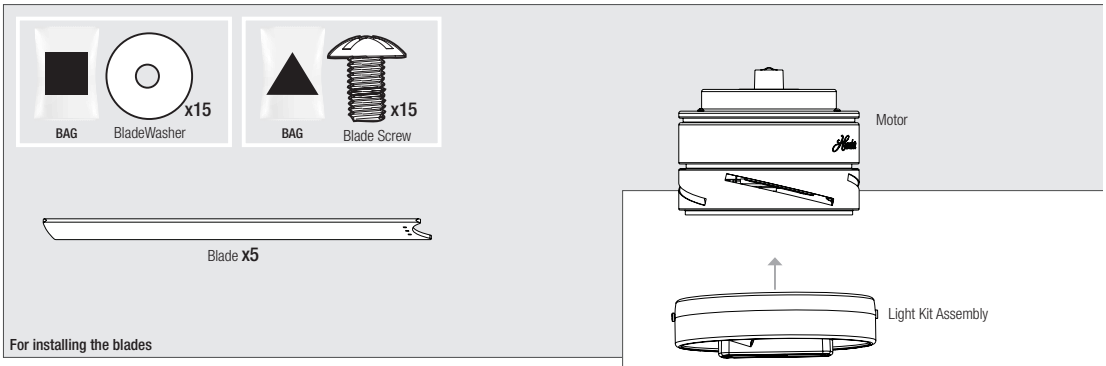

For installing the blades

For installing the light kit

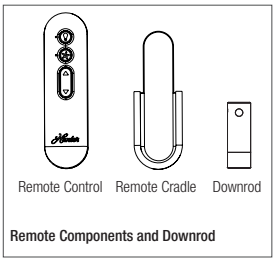

Remote Components and Downrod

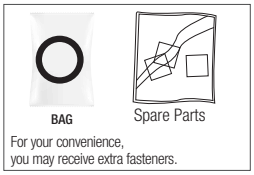

For your convenience, you may receive extra fasteners.

Note:

Fan style may vary.

Find a part that is missing or damaged?
Don't take it back to the store. Let us make it right. Visit us at HunterFan.com or call us at 1.888.830.1326.

#2 Chootoo Road, South Aranguez, San Juan, Trinidad

HUNTER - AERODYNE - CEILING FAN INSTALLATION GUIDE

Choosing the Right Installation Location

You probably bought this fan with a location in mind. Let's check below to make sure it is a good fit.

Check the room dimensions:

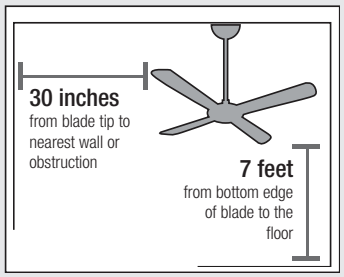

Check the outlet box:

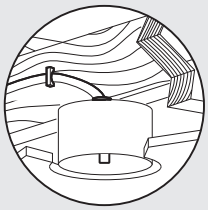

You must be able to secure the fan to building structure or fan-rated outlet box.

Checking the Ceiling Angle:

Standard Mounting

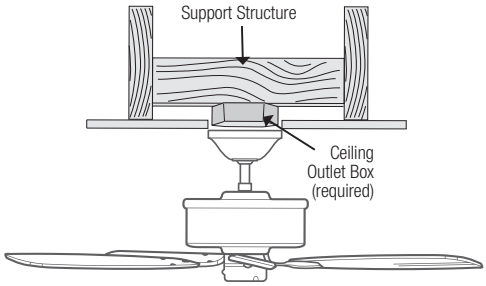

If you have a flat ceiling:

Hang your fan by a standard downrod. Some fans come with a shorter downrod for a Low Profile installation.

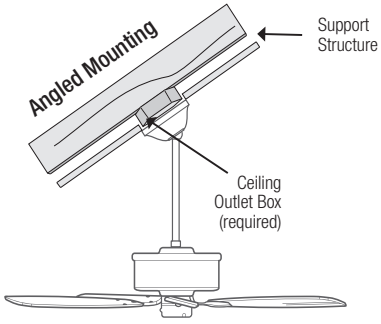

If you have an angled or vaulted ceiling:

1. You will need a longer downrod. (sold separately at HunterFan.com)
2. If your ceiling angle is greater than 34°, you will also need an Angled Mounting Kit. (Sold separately at HunterFan.com)

Angled Mounting

A little more information on Angled Mounting:

For optimum performance and appearance, a longer downrod should be used with your Hunter ceiling fan when installing on high or angled ceiling. If your ceiling is angled greater than 34° you will also need an Angled Mounting Kit. Longer downrods and the Angled Mounting Kit are sold separately at HunterFan.com.

Hunter Pro Tip:

Determining if you need an Angled Mounting Kit:
Fold on the dotted line. Place against edge againts the wall. Slide towards the ceiling.
If the guide touches the wall but not the ceiling, you need an angled mounting kit.

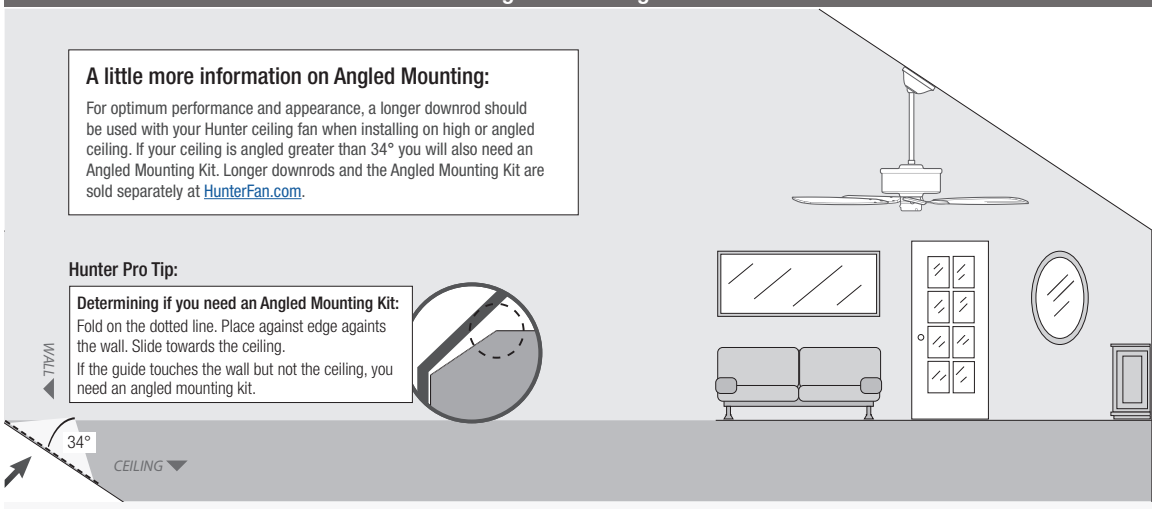

#2 Chootoo Road, South Aranguez, San Juan, Trinidad

HUNTER - AERODYNE - CEILING FAN INSTALLATION GUIDE

Installing the Ceiling Bracket

You have **two options** for installation. Pick which one works best for your location. Remove any existing bracket prior to installation. **Only use the provided Hunter ceiling bracket that came in your fan's box.**

Hunter Pro Tip:

The machine screws are the ones that came with your outlet box.

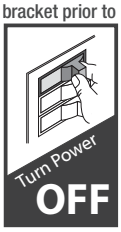

Do this first!

⚠ WARNING

To avoid possible electrical shock, before installing your fan, disconnect the power by turning off the circuit breakers to the outlet box associated with the wall switch location.

Option 1: Machine Screws

Use machine screws *(provided with outlet box)* and washers when securing to existing ceiling fan-rated outlet box. Make sure it is securely installed and is acceptable for fan support of 31.8 kg (70 lbs) or less.

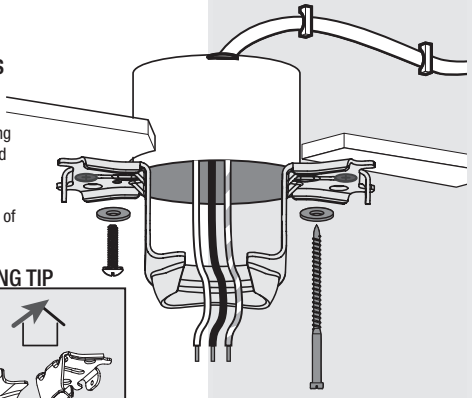

ANGLED MOUNTING TIP

For angled ceilings, point opening toward peak.

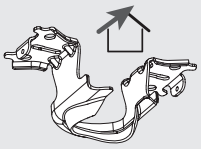

Option 2: Wood Screws

Use wood screws and washers (included) when securing to support structure with approved electrical outlet box. Drill 9/64" pilot holes in support structure to aid in securing ceiling bracket with hardware found in the ★ hardware bag.

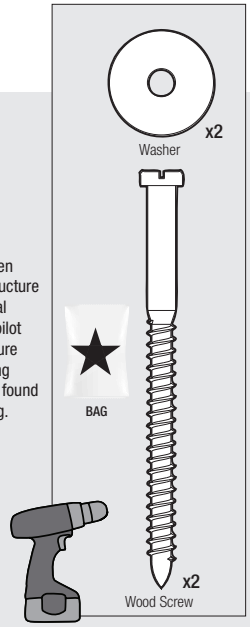

Installing the Downrod

Follow below if you are using the downrod that came pre-assembled in your box. Need to install a longer or shorter downrod? Check out the guide at the end of this manual.

Hunter Pro Tip:

The ground wire attached to the downrod is approximately 8 inches.

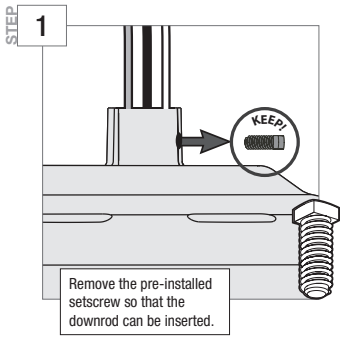

Remove the pre-installed setscrew so that the downrod can be inserted.

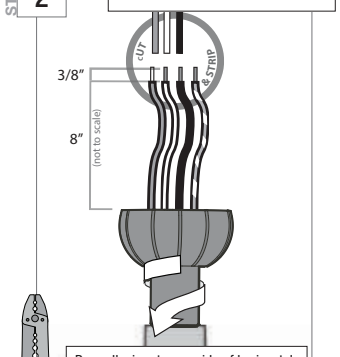

Pass all wires to one side of horizontal bar in downrod assembly. Hand tighten the downrod (at least 4–5 full turns) until it stops. Trim the wires coming from the fan so that 8-inches remain coming from the top of the downrod.

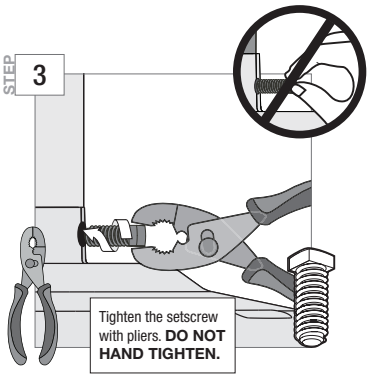

Tighten the setscrew with pliers. **DO NOT HAND TIGHTEN.**

⚠ WARNING

FAN FALL HAZARD

To prevent **SERIOUS INJURY** or **DEATH:**

- **ALWAYS** tighten setscrew with pliers.
- **DO NOT** hand tighten setscrew.
- **CHECK** the setscrew is tight using pliers each time you change fan direction.

#2 Chootoo Road, South Aranguez, San Juan, Trinidad

HUNTER - AERODYNE - CEILING FAN INSTALLATION GUIDE

Hanging the Fan

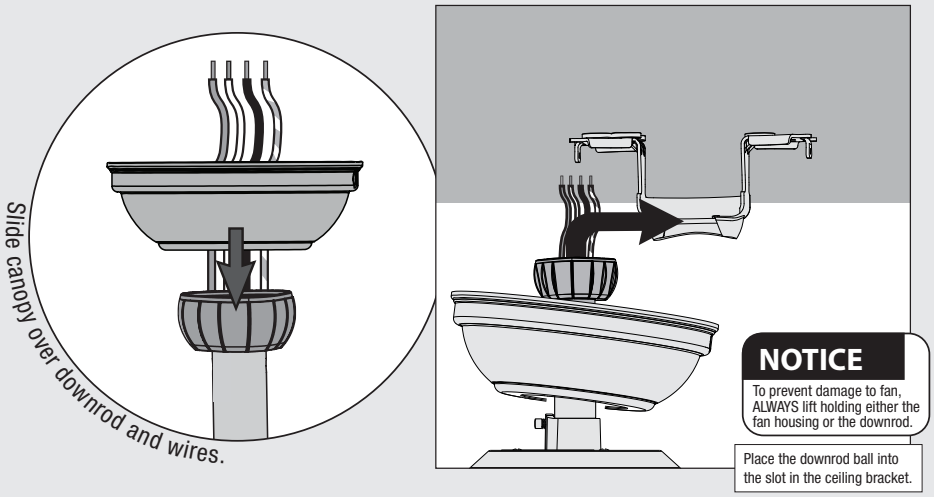

Progress Check:
Your fan should look like this.

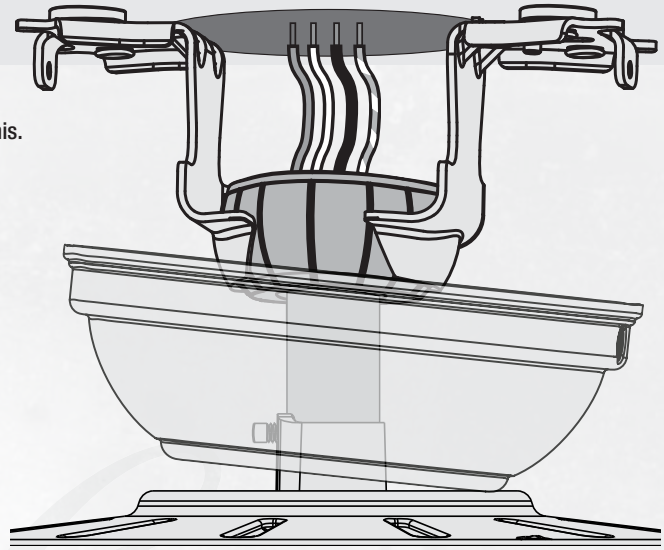

Note:
Fan style may vary.

#2 Chootoo Road, South Aranguez, San Juan, Trinidad